1.0 MECHANICAL & DIMENSIONS:

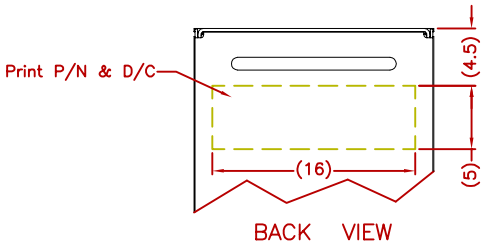

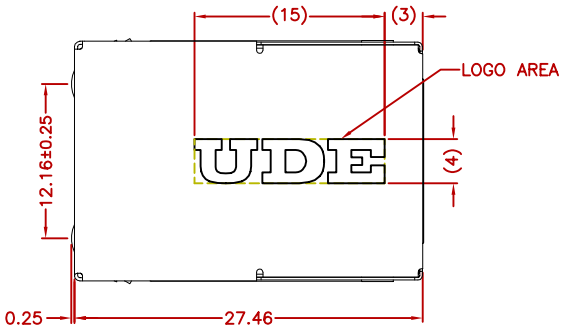

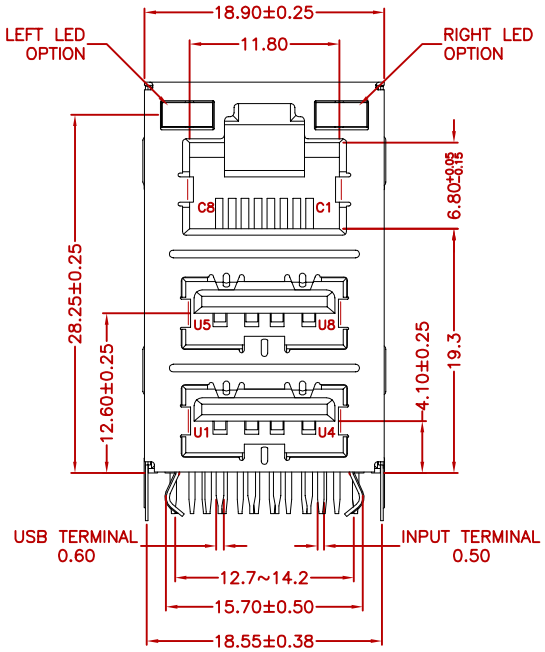

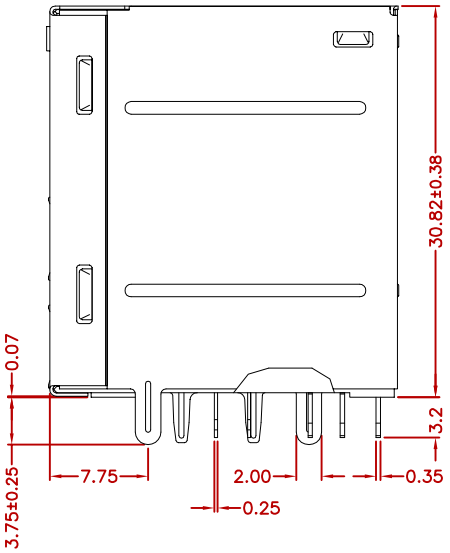

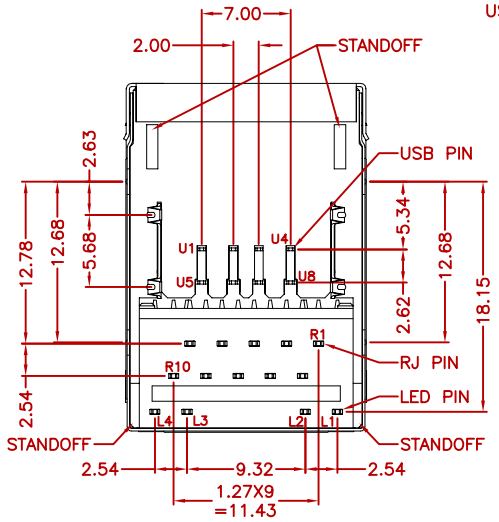

BOTTOM VIEW

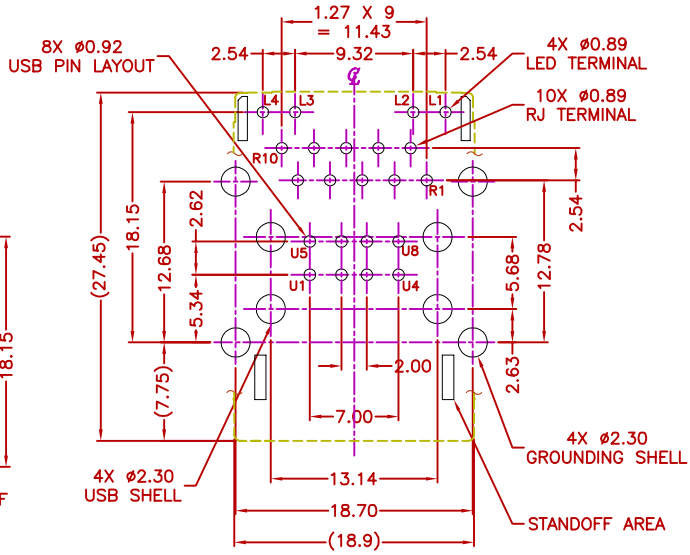

RECOMMENDED PCB LAYOUT(8P10C)
COMPONENT SIDE PCB THICKNESS : 1.60mm
ALL DIMENSION TOLERANCE ARE ±0.05 UNLESS OTHERWISE SPECIFIED

UDE INTERNAL DOCUMENT

APPROVE	UNITS: mm	QC : INSPECTION ITEM / 1			GENERAL TOLERANCE	DWG NO. RU1-131A9WDF
CHECK		REV	ECN NUMBER	DATE	.X± 0.25 X.°± 2°	
DRAW		A	EC0706183	29-Jun-07	.XX± 0.13 .X°± 1°	SCALE 1:1 / SHEET 1/8 / REV A
					.XXX± 0.08	

SIZE : A4

SPECIFICATION DRAWING File Location : \DWG\product\ *.dwg UD-P09-R10A

THIS DRAWINGS AND SPECIFICATIONS ARE CONFIDENTIAL AND DISCLOSED TO YOU ON CONDITION THAT NO FURTHER DISCLOSURE IS MADE BY YOU TO OTHER THAN UDE PERSONNEL WITHOUT WRITTEN AUTHORIZATION FROM UD ELECTRONIC CORP.